MOUNT DIMENSIONS (NOT TO SCALE)
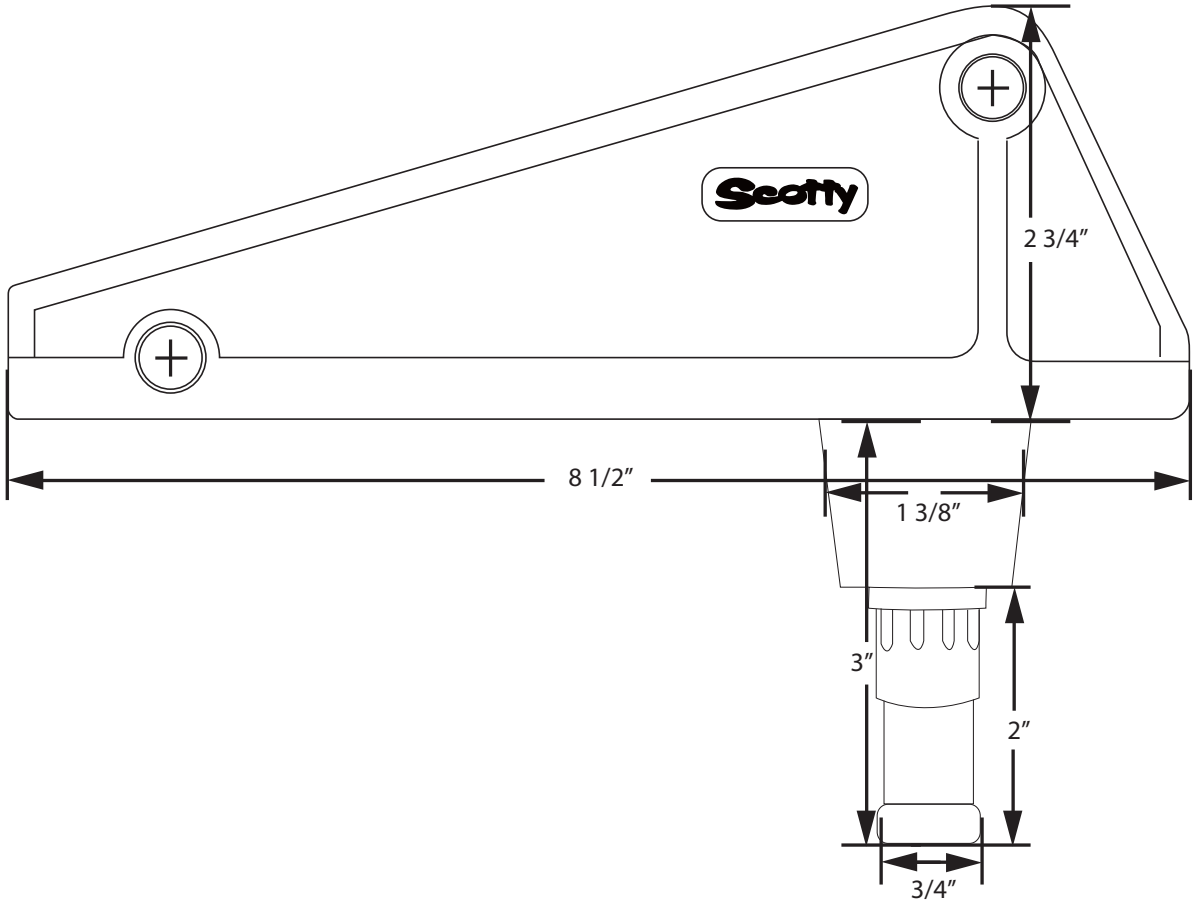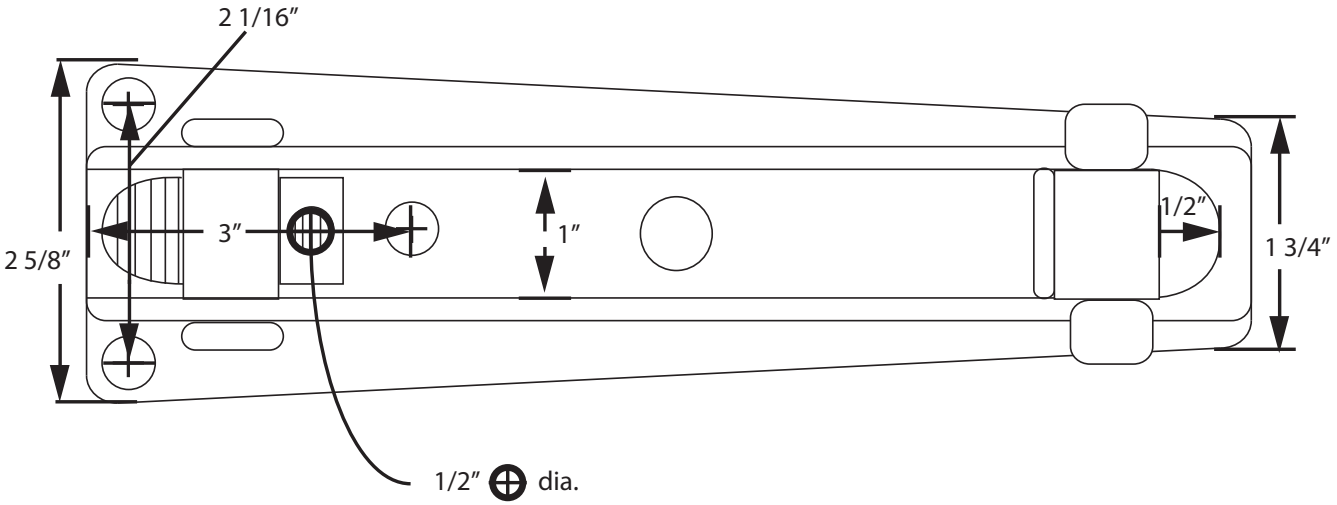
276/277 Anchor Lock (No Mounts Shown)